* 3 2 1 9 *

C09–C–303

3219

BOARD DIPLOMA EXAMINATION, (C–09)

MARCH/APRIL—2017

DCE—THIRD SEMESTER EXAMINATION

STRENGTH OF MATERIALS AND
THEORY OF STRUCTURES

Time : 3 hours] [*Total Marks* : 80

PART—A 3×10=30

Instructions : (1) Answer **all** questions.
(2) Each question carries **three** marks.
(3) Answers should be brief and straight to the point and shall not exceed *five* simple sentences.

1. Define shear stress and write the generalized equation for calculating shear stress in any section and explain the terms. 1+1+1=3

2. Calculate the maximum shear force in a circular beam of 100 mm diameter, if the maximum shear stress induced in beam is 12 N/mm^2. 3

3. Calculate the prop reaction when the prop is placed at free end for a cantilever beam 3 m span and carries a UDL of 4 kN/m over its entire length. 3

4. Calculate the deflection under point load for a simply supported beam of 6 m span carries a central point load of 20 kN. 3

5. State Mohr's first and second theorems with equations. 1½+1½=3

6. Define critical load, factor of safety and safe load for a column. 1+1+1=3

7. Calculate the slenderness ratio for a hollow circular column of 300 mm diameter with 15 mm thickness. The column is 6 m long and fixed at both ends. 3

8. State middle-third rule in dams. 3

9. Define statically determinate and statically indeterminate frames. 1½+1½=3

10. Find the torque transmitted by a shaft of 60 mm diameter, if the shaft is subject to maximum shear stress of 60 N/mm^2. 3

PART—B

10×5=50

Instructions : (1) Answer *any* **five** questions.

(2) Each question carries **ten** marks.

(3) Answers should be comprehensive and the criterion for valuation is the content but not the length of the answer.

11. A simply supported I-section beam shown in figure, carries a UDL of 20 kN/m. Calculate the maximum span required, if maximum permissible bending stress in tension and in compression not to exceed 80 N/mm^2 and 120 N/mm^2. 10

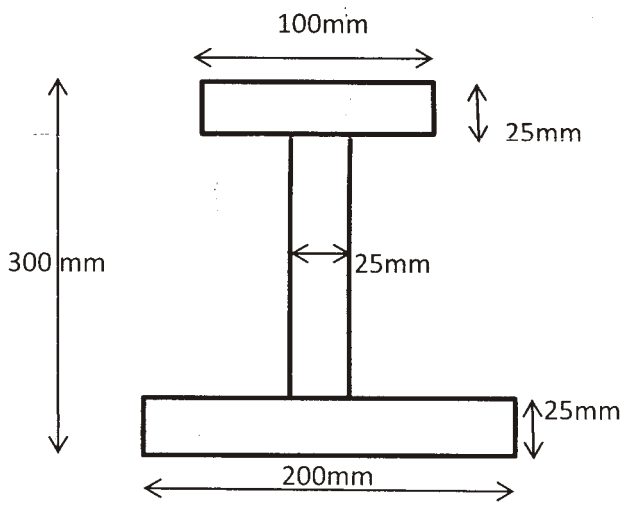

12. A rectangular beam 200 × 300 mm is simply supported over a span of 3 m, carries a UDL of W kN/m on its entire span. The maximum flexural stress due to bending is 8·5 N/mm^2. Calculate the intensity of load and maximum shear stress induced in beam. 6+4=10

13. Calculate the maximum slope and deflection using Mohr's theorem for a cantilever beam 6 m long and carries a UDL 12 kN/m over its entire span. Take E 210 kN/mm^2 and I 320 10^6 mm^4. 4+6=10

14. A rectangular beam 100 × 200 mm is simply supported on 6 m span and carries a UDL 4 kN/m over its entire length. Calculate the maximum slope and deflection using double integration method. Take E 20 kN/mm^2. 5+5=10

15. A mild steel stanchion built up of two 250 × 100 mm standard channels placed 120 mm apart back-to-back with two 360 × 20 mm plates, one plate is riveted to each flange. If the stanchion is 8 m long and fixed at both ends, calculate the safe and critical load it can carry with a factor of safety 3. 7+3=10

A 3565 mm^2

Ixx 3667 9 10^4 mm^4

Iyy 296 4 10^4 mm^4

Cyy 27 mm, E 200 kN/mm^2

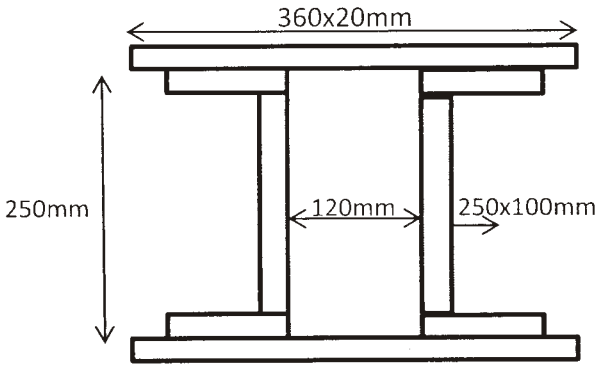

16. A circular bar 4 m long with both ends fixed, buckles at 25 kN of axial load. Determine the diameter of circular bar using Rankine's theory. Take f_c 330 N/mm^2 and 1/7500. 10

17. A trapezoidal masonry dam with 2 m top, 5 m bottom retains water on its vertical face. Calculate the maximum height of dam to store up to its full height so that no tension is formed at base. Take specific weight of masonry and water as 24 kN/mm^2 and 10 kN/mm^2 respectively. 10

18. Find the forces in all members of a truss using method of joints. 10

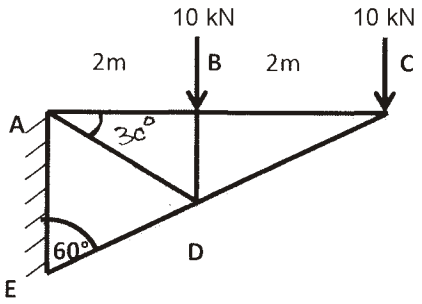

★ ★ ★